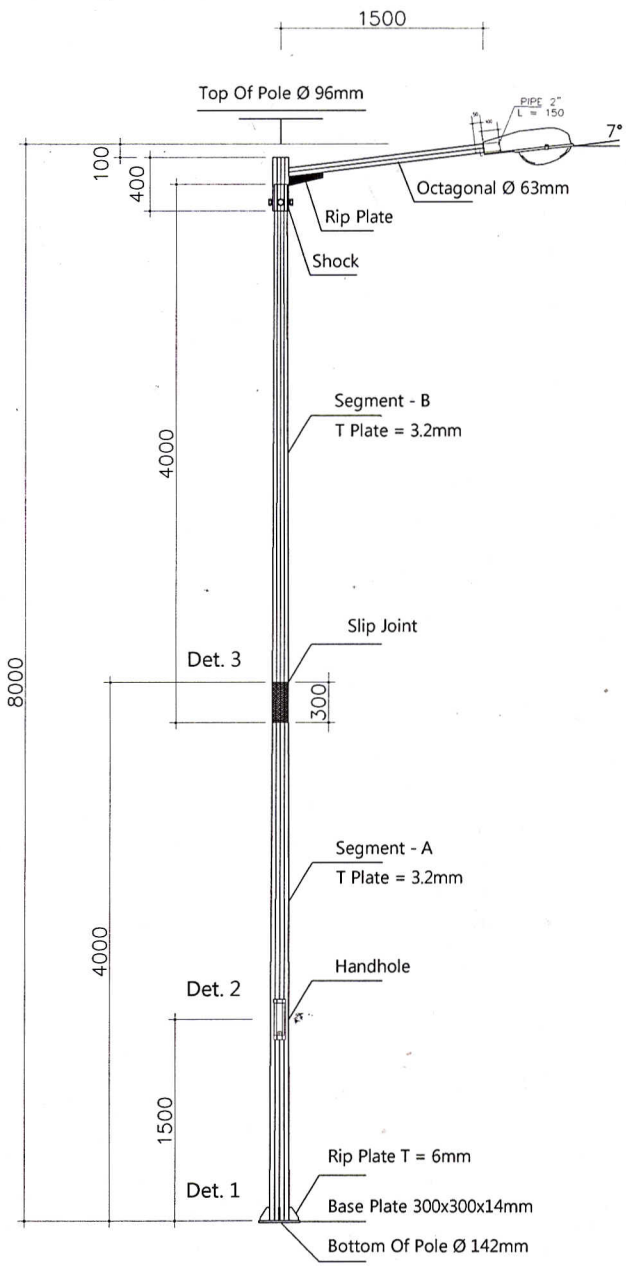


Tiang PJU H-08 M Single T
SCALE 1 : 25
*OCTAGONAL*

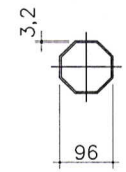


Det. Top Of Pole
SCALE 1 : 25

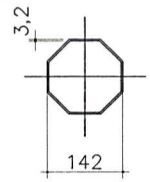


Det. Bottom Of Pole
SCALE 1 : 25

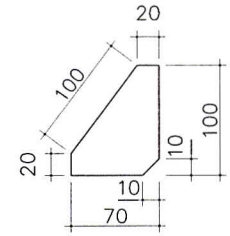


Rip Plate T = 6mm

Det. Rip Plate
SCALE 1 : 25

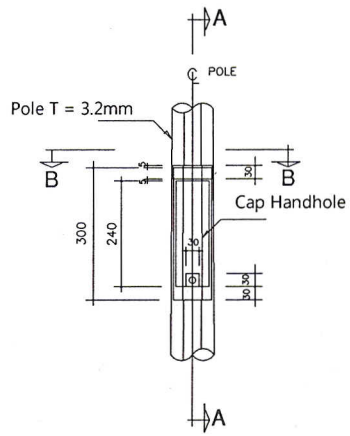


Det 2. Handhole
SCALE 1 : 25

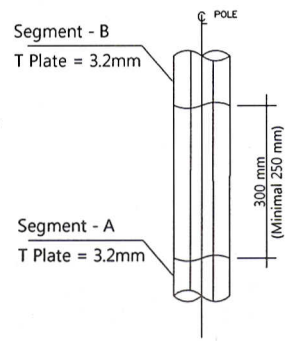


Det 3. Slip Joint
SCALE 1 : 25

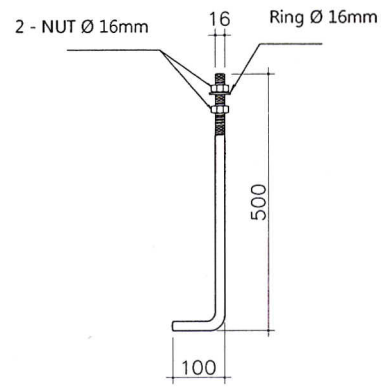


Det. Anchor Bolt
SCALE 1 : 25

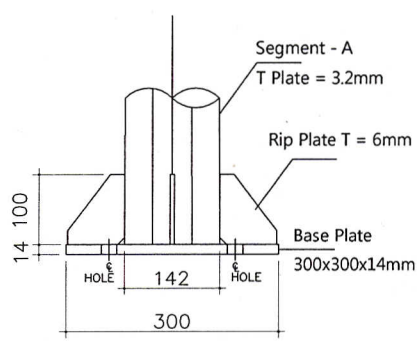


DET. 1 Base Plate
SCALE 1 : 25

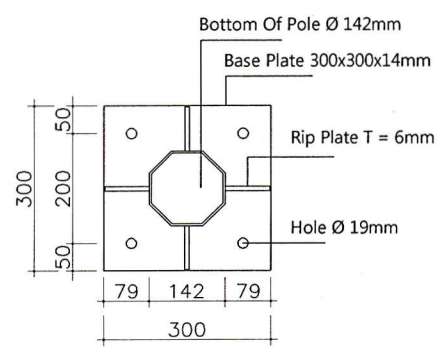


DET. 1 Base Plate
SCALE 1 : 25

KETERANGAN

STANDART MUTU :

- ISO 9001 : 2008
- Plate Baja : ST 41 / SS 400
- Welding : Las Listrik
- Finishing Hot Dip Galvanize
- Segment System Slip Joint
- Segment A = 4000mm
- Segment B = 4000mm
- Bottom Of Pole Ø 142mm
- Base Plate 300x300x14mm

PRODUCTION :

HeloRI

PT. HELORI GRAHASARANA

JOB TITLE :

TECHNICAL SPECIFICATION

CLIENT :

PRODJECT :

DRAWING TITLE :

**TIANG PJU OCTAGONAL H-08M SINGLE T**

| DATE | CLIENT APPROVAL | APPROVAL |
|---|---|---|
| | PT heloRI Grahasarana heloRI Jakarta | Risawan. W |
| CAD | DESIGN | CHECK |
| Auto CAD 2009 | Dwi. Y | Efi |

| DRAWING NO : | SHEET NO : |
|---|---|
| RL-ST-H08 | SHEET 1 Of 1 |